Adjustable Clamping Levers • with clamping screw

24410.1444

Product Description

Adjustable clamping levers find versatile applications when the area of use is confined or a specific lever position is required.

Material

Lever
- Zinc die-cast, plastic coated, black, similar to RAL 9005, matt structure

Inner parts
- Steel, blackened, quality 5.8

Screw
- Steel, blackened, quality 5.8

Operation

By lifting the lever the serrations are disengaged. The lever can be positioned by the serrations. On releasing the lever, the serrations are automatically re-engaged.

More information

Notes

The screw part can be exchanged.

References

The version with ball-headed (picture 3) can be combined with the thrust piece, plastic (EH 22570.).

Further products

- Thrust Pads, plastic

Drawing

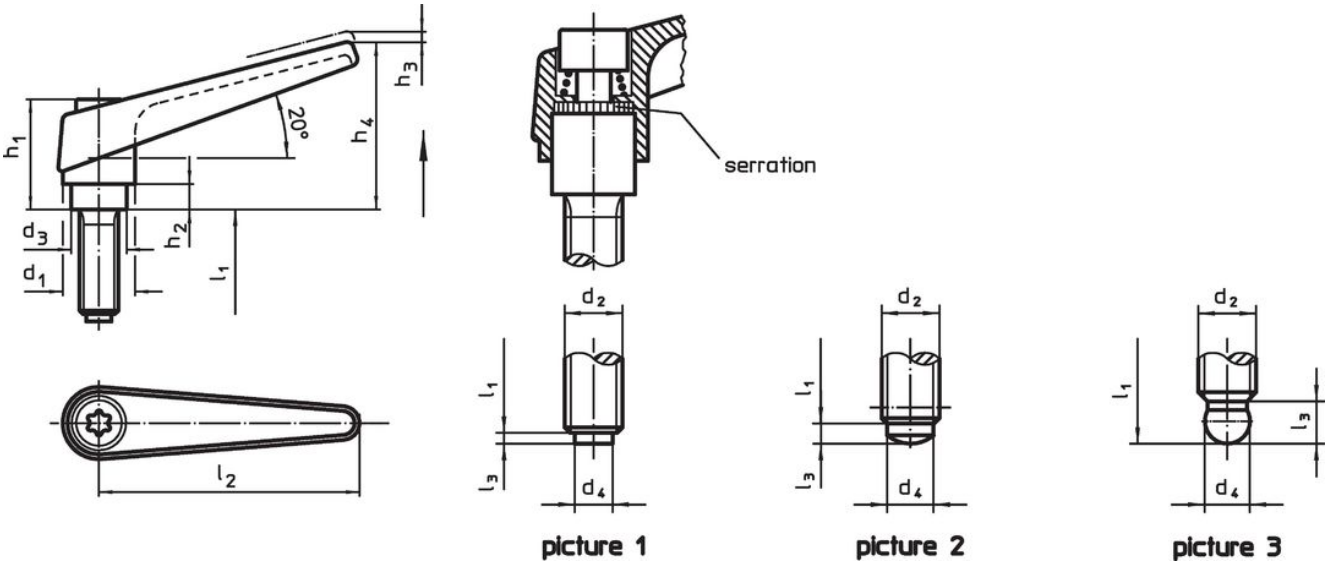

Order information

Dimensions												Art. No.
d_1	d_2	l_1	d_3	d_4	h_1	h_2	h_3	h_4	l_2	l_3	[g]	
[mm]												
with brass thrust pin – picture 1, black												
18	**M10**	**20**	13.5	6.5	31	6.5	3	45	62	1.9	127	**24410.1444**

Compliance

RoHS compliant

Contains lead - compliant according to exceptions 6a / 6b / 6c.

Contains SVHC substances >0,1% w/w

Contains lead - SVHC list [REACH] as of 27.06.2024.

Contains Proposition 65 substances

Lead can cause cancer and reproductive harm from exposure
https://www.P65Warnings.ca.gov/

Free from Conflict Minerals

This product does not contain any substances designated as "conflict minerals" such as tantalum, tin, gold or tungsten from the Democratic Republic of Congo or adjacent countries.