Standard Clamping Jaws • for floating clamp M 12

23320.0052

Product Description

The clamping jaws can be used for floating clamps 23320.0008, 23320.0010, 23320.0012, and 23320.0014.

Material

- Case-hardened steel, nitrided, manganese phosphated

Assembly

When using custom-made jaws, it is important to insert the tightening screw (M 8-12.9, 43 Nm) 10 mm deep into the clamp housing on the upper clamping jaw and 9 mm deep into the clamp housing on the lower clamping jaw.

Drawing

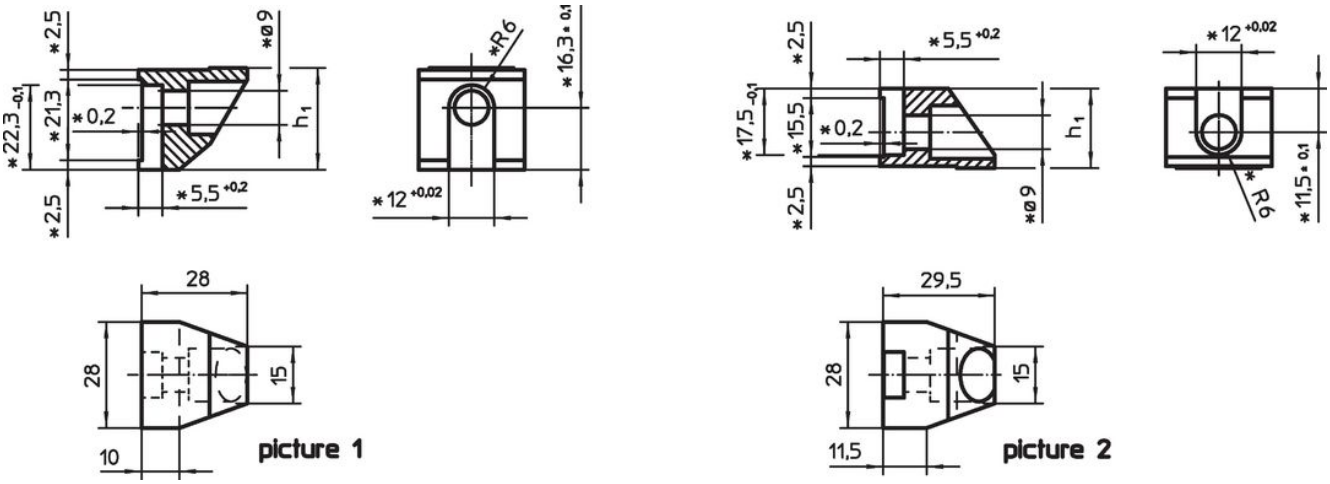

* Specifications and material of especially designed jaws have to be taken into consideration.

Order information

Clamping range [mm]	Dimensions h_1 -0.1 [mm]	[g]	Art. No.
upper standard clamping jaw – picture 2			
0 – 12	21	69	23320.0052

Compliance

RoHS compliant

Compliant according to Directive 2011/65/EU and Directive 2015/863.

Does not contain SVHC substances

No SVHC substances with more than 0.1% w/w contained - SVHC list [REACH] as of 23.01.2024.

Does not contain Proposition 65 substances

No Proposition 65 substances included.
https://www.P65Warnings.ca.gov/

Free from Conflict Minerals

This product does not contain any substances designated as "conflict minerals" such as tantalum, tin, gold or tungsten from the Democratic Republic of Congo or adjacent countries.