Ball-Ended Thrust Screws • headless, round ball

22720.0264

Product Description

Ball-ended thrust screws with thermoplastic ball are used for pressure sensitive pieces.
Ball-ended thrust screws can also be used for positioning and clamping, tightening or supporting of non-parallel surfaces.

Material

Ball
- Thermoplastic POM, white

Screw
- Stainless steel 1.4305

More information

Notes

Ball not secured against rotating.
Customized design on request.

References

Thread lock on request, please refer to appendix - Technical Data -

Further products

- Ball-Ended Thrust Screws, headless, with fine-pitch thread
- Ball-Ended Thrust Screws, headless, round ball and hexalobular socket

Drawing

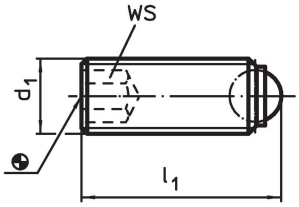

Order information

Dimensions			WS	Load capacity for static load[1] max.				Art. No.
d_1	l_1	Ball diameter			min.	max.		
[mm]			[mm]	[kN]	[°C]		[g]	
round ball from thermoplastic, Stainless steel								
M5	**12**	3	2.5	0.5	-30	80	1	**22720.0264**

[1] Statements on load capacity are not valid for the stainless steel type (except the type fitted with thermoplastic balls).

Application example

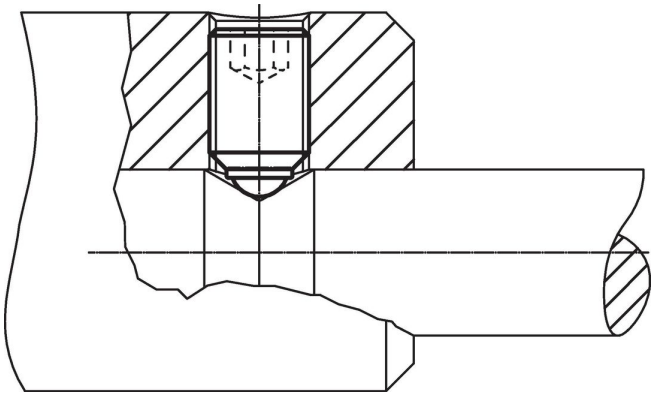

Compliance

RoHS compliant

Compliant according to Directive 2011/65/EU and Directive 2015/863.

Does not contain SVHC substances

No SVHC substances with more than 0.1% w/w contained - SVHC list [REACH] as of 27.06.2024.

Does not contain Proposition 65 substances

No Proposition 65 substances included.
https://www.P65Warnings.ca.gov/

Free from Conflict Minerals

This product does not contain any substances designated as "conflict minerals" such as tantalum, tin, gold or tungsten from the Democratic Republic of Congo or adjacent countries.