# Ball Lock Pins • self-locking, with combination handle

22370.0818

## Product Description

For quick fastening, locking, adjusting, changing and securing. Quickly and easily unlockable for frequently repeated connections.
All versions are corrosion resistant.
Ergonomic grip, different colour combinations available. The grip design provides protection of unintentional unlocking.

### Material

**Pin part**
- Stainless steel 1.4305

**Handle**
- Thermoplastic PA 6 black / black

**Spring**
- Stainless steel

### Operation

The balls are unlocked by pressing the button.

**More information**

### Notes

Customized design on request.

### References

Stainless steel 1.4542, see EH 22380.

### Accessories

Can easily be fitted with retaining cable EH 22400.

### Further products

- Ball Lock Pins, self-locking, with combination handle, precipitation-hardened
- Locating Bushings, for ball lock pins and socket pins
- Locating Bushings, with flange, for ball lock pins and socket pins
- Retaining Cables
- Positioning Bushings, with collar, DIN 172 A
- Positioning Bushings, without collar, DIN 179 A

## Drawing

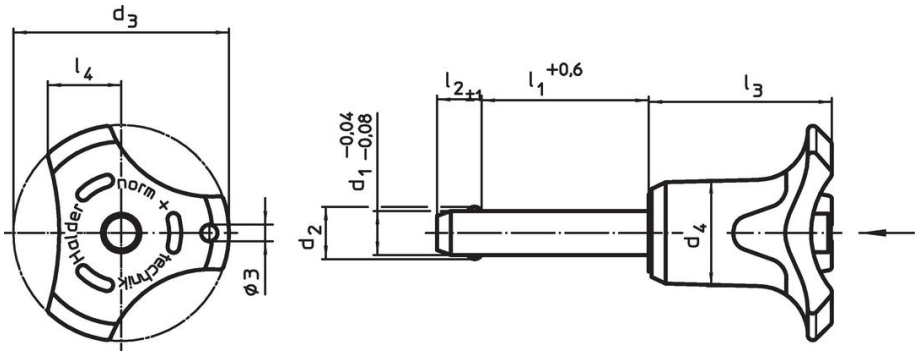


## Order information

| Dimensions | | | | | | | | Location hole | Shearing resistance, two-shear[1] | | | | Art. No. |
|---|---|---|---|---|---|---|---|---|---|---|---|---|---|
| $d_1$ -0.04 -0.08 | $l_1$ +0.6 | $d_2$ | $d_3$ | $d_4$ | $l_2$ ±1 | $l_3$ | $l_4$ | H11 | min. | min. | max. | | |
| [mm] | | | | | | | | [mm] | [kN] | [°C] | | [g] | |
| **Handle colour: black** | | | | | | | | | | | | | |
| **6** | **70** | 7 | 33.2 | 14.5 | 7 | 26.7 | 10.8 | 6 | 21 | -30 | 80 | 28 | 22370.0818 |

[1] Shearing resistance similar to DIN 50141

## Application example

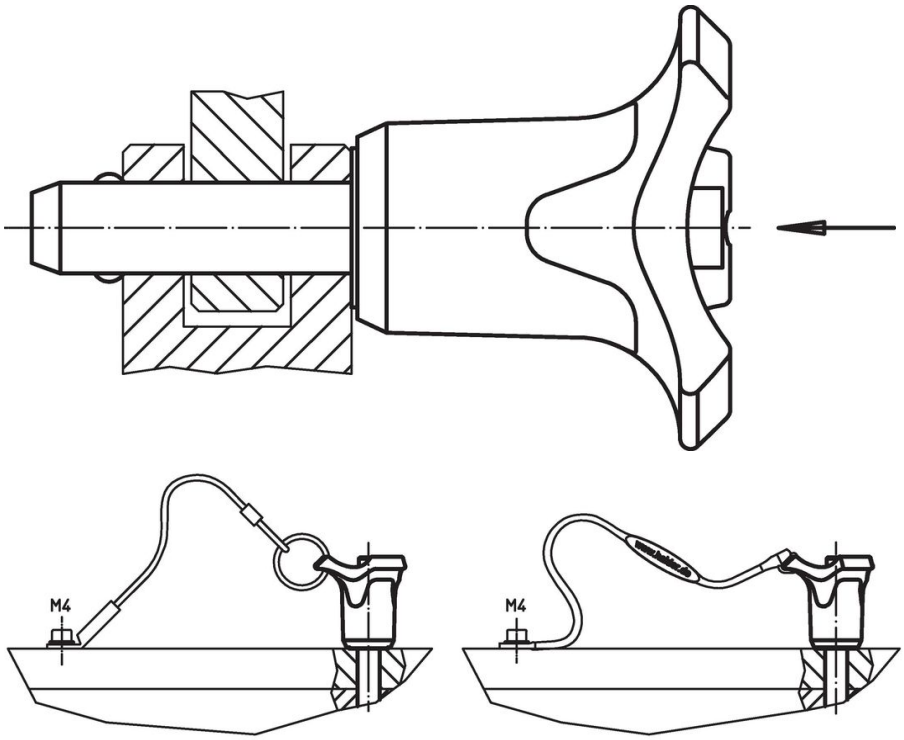

## Compliance

### RoHS compliant

Compliant according to Directive 2011/65/EU and Directive 2015/863.

### Does not contain SVHC substances

No SVHC substances with more than 0.1% w/w contained - SVHC list [REACH] as of 27.06.2024.

### Does not contain Proposition 65 substances

No Proposition 65 substances included.
https://www.P65Warnings.ca.gov/

### Free from Conflict Minerals

This product does not contain any substances designated as "conflict minerals" such as tantalum, tin, gold or tungsten from the Democratic Republic of Congo or adjacent countries.